FAST MOVING TECHNOLOGY

RobiFix

Flat primary circuit connectors | Welding Automation

EN

STÄUBLI ELECTRICAL CONNECTORS

Connections for Life

Stäubli, as the international technology leader, offers innovative mechatronics solutions in its four divisions: Electrical Connectors, Fluid Connectors, Robotics, and Textile. At Stäubli Electrical Connectors, we develop advanced connection solutions based on the reliable MULTILAM contact technology.

We create connections for life – and our customers are at the center of these connections. We are convinced that solid and stable partnerships directly contribute to our mutual success.
We take on the needs of our partners and deal with the most extraordinary challenges. As a result, we always create, sell and support reliable and long-lasting products for markets with the highest productivity and safety requirements in close cooperation with our customers.

Together for reliable and safe connections

We know that you entrust us with the functionality of your applications and we work hard to ensure this every single day. Thanks to our high level of expertise, our extensive experience and the multiple successful co-operation with our partners, numerous new developments have originated at Stäubli Electrical Connectors and subsequently have become worldwide standards. This includes our MC4 connector portfolio for which we are today the global market leader in photovoltaic. As the Stäubli original, the MC4 represents the result of our constant quest for innovation, quality and safety.
Further examples are the CombiTac modular connector system or the Quick Charging Connector (QCC) for automatic charging systems.
We ensure connections for life together with our long-standing customers in a wide range of industries from renewable energies, power transmission and distribution and E-mobility to industrial automation applications, railway and welding automation, test and measurement and medical devices.
Thus, developing reliable, efficient and safe solutions based on our proven MULTILAM contact technology, which guarantees a high service lifetime in addition to highly efficient power transmission.

Applications and benefits

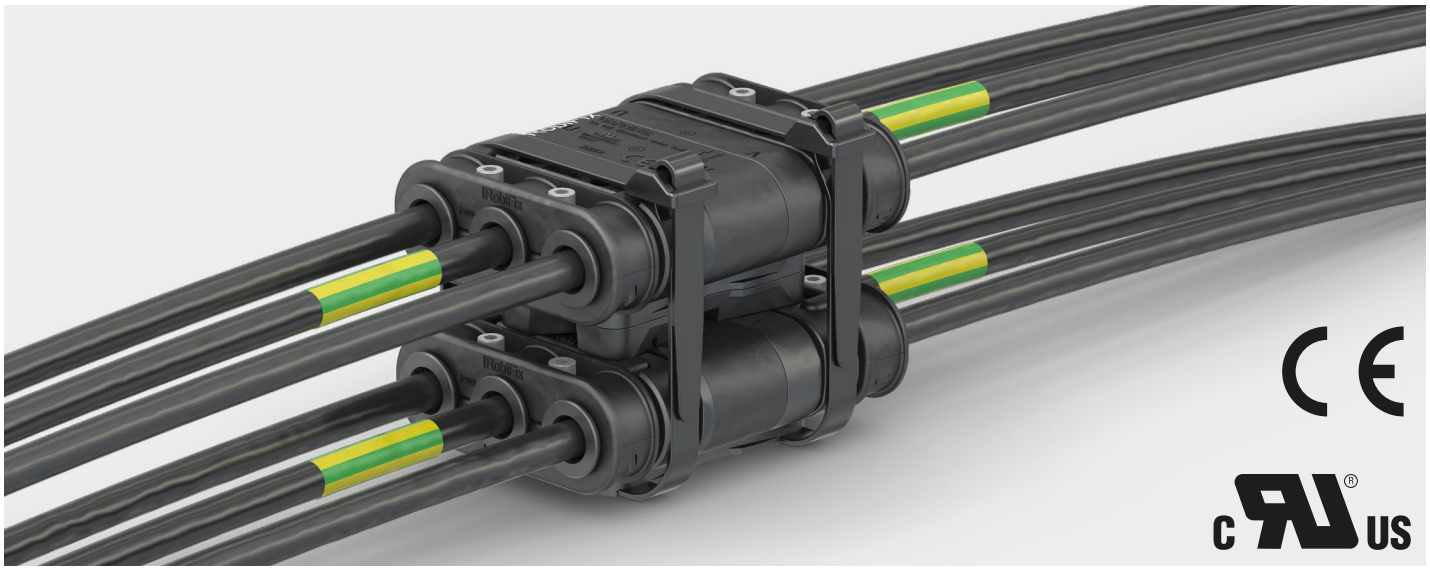

RobiFix primary circuit connectors for spot-welding applications are used in welding robots and welding guns, dress-packs, frequency converters and tool changers in automotive body construction.

Quick couplings help to reduce downtime during production, as well as maintenance costs.

- Unparalleled contact reliability thanks to MULTILAM advanced contact technology
- Very light and compact design
- Easy exchange of cables by hand
- Fast integration and easy maintenance
- High current-carrying capacity with reverse polarity protection
- Solutions for all primary circuit supply segments, even with different conductor cross-sections

RobiFix

Primary circuit Quick Disconnect for resistance welding applications on robots, dresspacks, welding guns, weld timers and automatic tool-changers in the automotive industry.

Quick disconnect solutions for minimized integration time, downtime, installation and maintenance costs.

- Unequalled contact reliability thanks to the Stäubli MULTILAM technology
- Fast integration and easy maintenance
- Extremely compact design with superior performance
- First mate/last break PE-contact for additional safety
- High current-carrying capacity, polarity protection
- Ideal in combination with single-core conductors
- A solution for each dresspack segment from J1 to J6, even with mixed cross-sections
- Easy replacement of upper and lower arm dress package helps reduce downtime and minimize production loss.

Assembly and disassembly
by hand without tools

AC 1000 V | max 223 A (RobiFix-Twin: max 421 A)

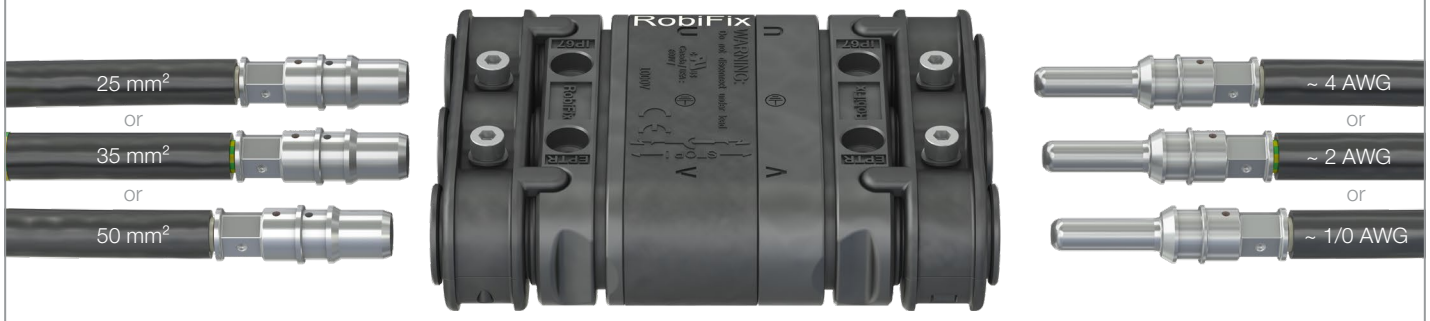

UL: AC 600 V | UL: max 130 A (50 mm² ~ 1/0 AWG)

Quick and easy assembly
Insertion and extraction of crimped-on conductors by hand.
Different cable cross-sections can be combined.

Smaller bending radii possible in comparison to jacketed cable (2+PE).

Cable strain relief

Cable-Ø
11 mm – 17 mm (.43" – .67")

Cable strain relief for single conductors. No need for cable glands.
Cable outer Ø from 11 mm to 17 mm. The diameter can be adjusted using rubber rings if necessary see page 27/28 for custom solutions for smaller diameters.

Technical data

Technical data	
Number of poles	2 + PE
Rated current	max. 223 A (up to 1 kHz; higher frequencies see table p. 31) UL: USR: 223 A (50 mm² ~ 1/0 AWG) CNR: 187 A (50 mm² ~ 1/0 AWG)
Rated voltage	max. AC 1000 V UL: max. AC 1000 V
Test voltage	4,26 kV (50 Hz, 1 min.)
Protection, in mated condition	IP67 (IEC)
Type of termination	Crimping
Operating temperature	–20 °C...+90 °C
Material contacts	CuZn, Ag
Insulation material	TPE[1)]
Further specifications	IEC 61984, DIN VDE 0298-4/2003-08
Weight (incl. contacts)	J1: ~ 780 g (RobiFix-B35-FZEM/RobiFix-S35-FZEE) J1: ~ 765 g (RobiFix-B35-ZEM/RobiFix-S35-MTB) J3: ~ 580 g (RobiFix-B35-MTB/RobiFix-S35-MTB) J6: ~ 500 g (RobiFix-B35-FZEE/RobiFix-TAE1-57)

Thermal steady current

Depending on cross-section, ambient temperature and cable type, RobiFix can be used for a thermal steady current up to **223 A.**

With two RobiFix in a stacked configuration (RobiFix-TwinPower), **max. 421 A** are possible (page 26). This is ideal for aluminium spot-welding guns.

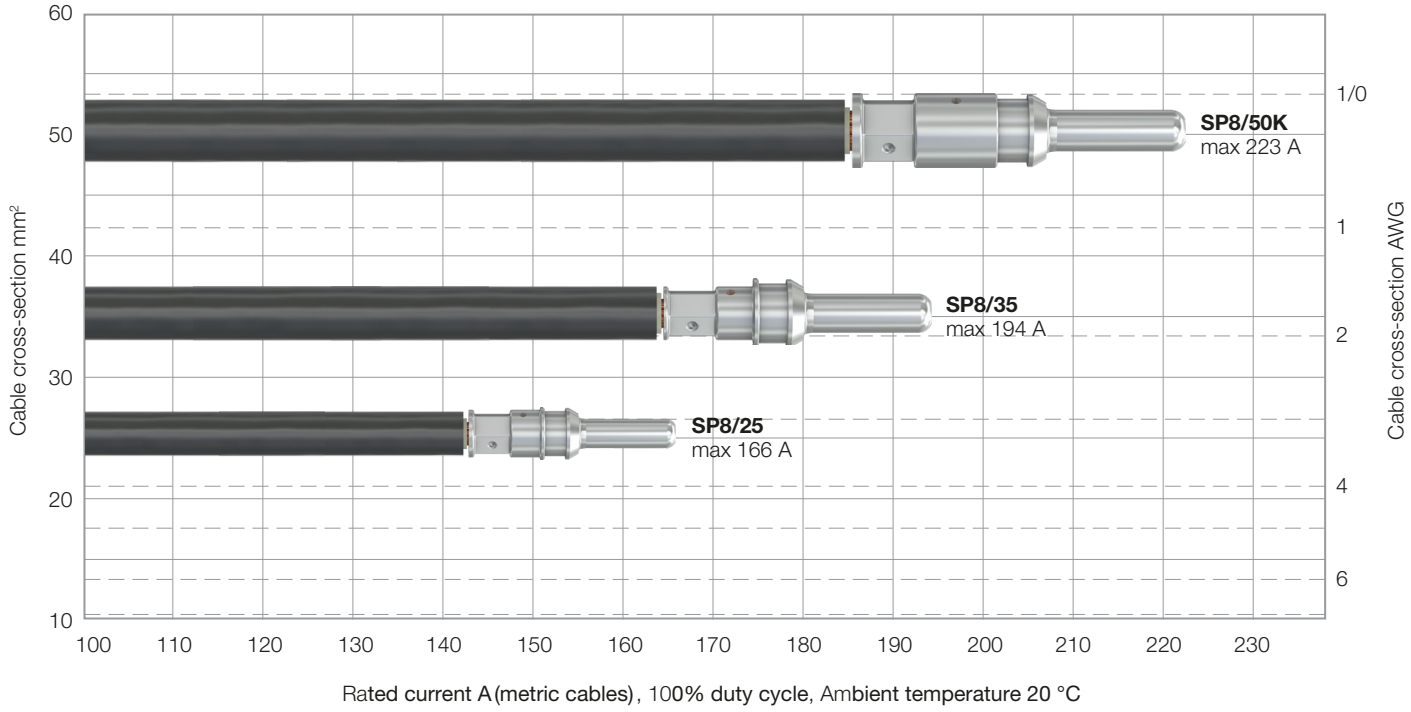

[1)] Resistant to welding splatter and standard lubricating oil.

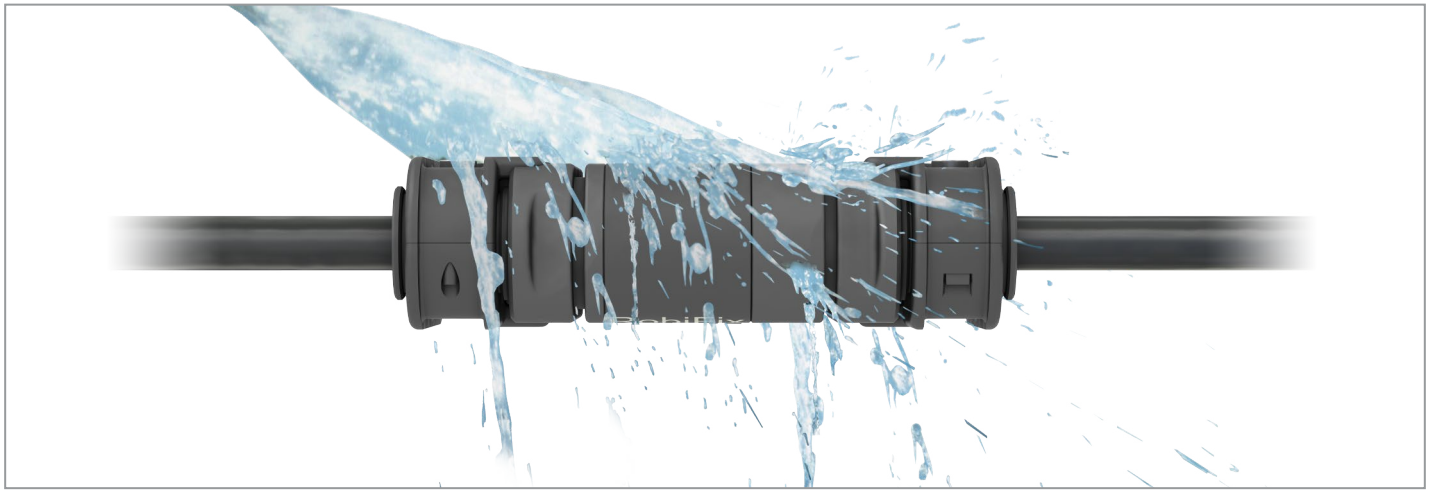

Low profile, IP67

Resistant against welding fumes/weld spatter

Extremely compact, RobiFix is also considerably lighter compared to conventional power connectors (details page 9).

Overview RobiFix solutions

J6
Transformer connection 90°
Page 20

J6
Transformer connection
Page 19

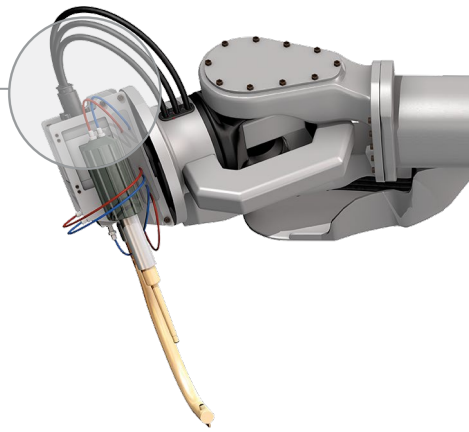

J1
Flat mount
Page 16

J1
Flange mount
Page 14

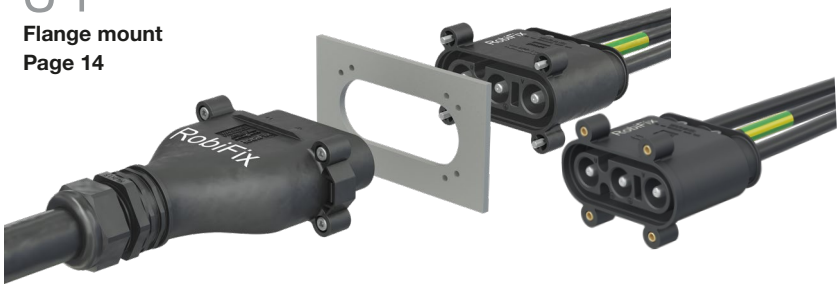

J1
Flange mount
single conductors
Page 12

J3
double dresspack
page 26

J3
Mixed conductors
Page 18

J3
Single conductors
Page 17

Weld timer connection,
single conductors
Page 11

Energy efficiency

Comparison Stäubli/Ordinary connector suppliers

35 mm² (2 AWG) 150 A	Temperature (average)	Contact resistance (R_{crimp})	Total resistance per contact (R_{total})	Power loss per contact (P_v)
Stäubli	60 – 80 °C	<25 µΩ	<110 µΩ	<2,5 W
Usual suppliers	119 – 160 °C	78 – 100 µΩ	>210 – 260 µΩ	5 – 6 W

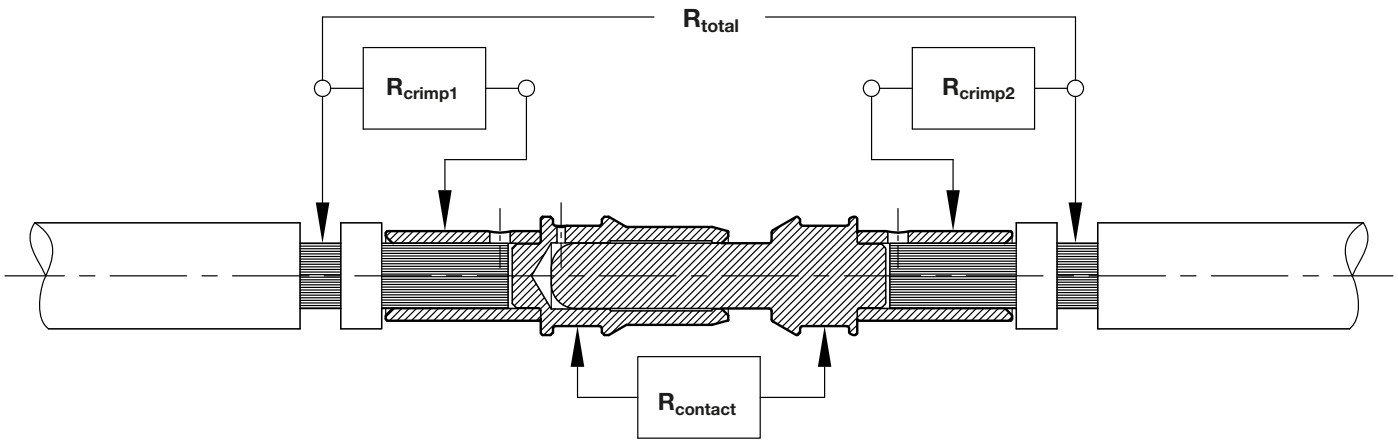

Energy efficiency for sustainability in production

The quality of a plug connector is determined by the sum of the resistances R_{total} (R_{crimp1} + R_{crimp2} + $R_{contact}$). The lower the overall resistance, the smaller are the power losses P_v in the plug connection. Small power losses are characteristic of an efficient, environment-friendly connector.

Weld timer connection

Single conductors

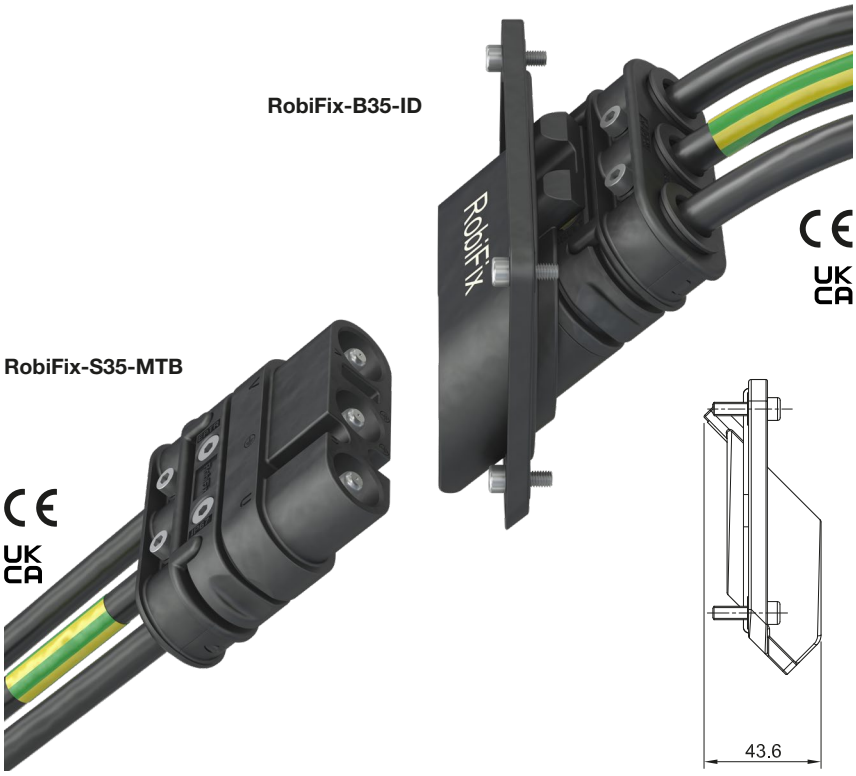

RobiFix-B-ID

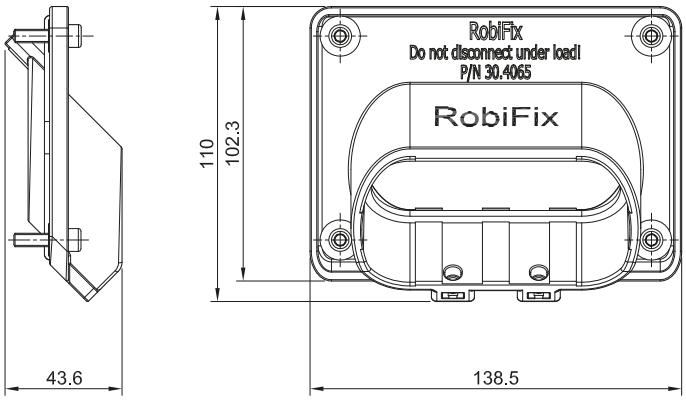

Order No.	Type	Designation	Contacts	Cable outer Ø
				mm
30.4066	RobiFix-B35-ID	Receptacle, incl. complete socket contact carrier with contacts	BP8/35	~11 – 17
30.4010	RobiFix-S35-MTB	Complete pin contact carrier (incl. cable strain relief and contacts)	SP8/35	~11 – 17

Individual parts

30.4065	RobiFix-B-ID	Receptacle, without connector	without	~11 – 17
30.4016	RobiFix-S-L	Empty pin contact carrier (incl. cable strain relief)	without	~11 – 17
		Pin and socket contacts (25/35/50 mm²)	see page 22	

The pin contact carrier (e.g. 30.4010) can also be mounted in the receptacle (30.4065).

Accessories page 23 – 28

Assembly instructions MA311

www.staubli.com/electrical

J1 Flange mount

Single conductors, two-sided access

Two-sided access for installation:
Screw heads of the housings are accessible in the respective plug-in direction.

RobiFix-B35-FEJ1

RobiFix-S35-FZEE

RobiFix-FEJ1

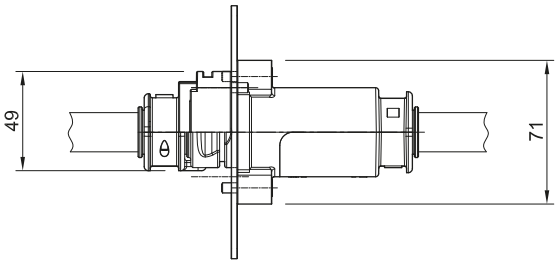

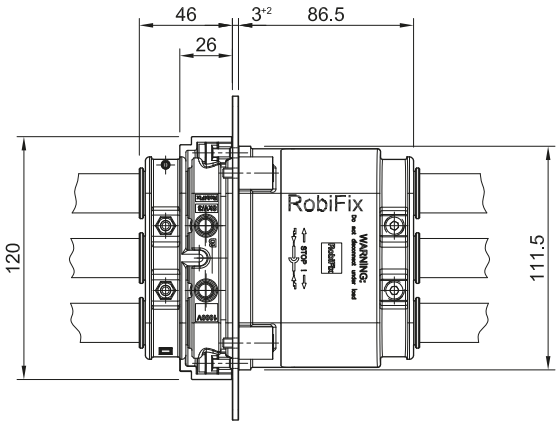

Order No.	Type	Designation	Contacts	Cable outer Ø
				mm
30.4081	RobiFix-B35-FEJ1	Female connector, incl. flanged cable strain relief	BP8/35	~11 – 17
30.4039	RobiFix-S35-FZEE	Male connector, incl. cable strain relief housing RobiFix-FZEE	SP8/35	~11 – 17

Individual parts

30.4082	RobiFix-FEJ1	Flanged cable strain relief without connector	without	~11–17
30.4084	RobiFix-B-FEJ1	Female connector empty, incl. Flanged cable strain relief	without	~11–17
30.4043	RobiFix-S-FZEE	Male connector empty, incl. cable strain relief housing RobiFix-FZEE	without	~11–17
		Pin and socket contacts (25/35/50 mm²)	see page 22	

Accessories page 23 – 28

MA

Assembly instructions MA311

www.staubli.com/electrical

Single conductors, single-sided access

Single-sided access for installation: All screw heads can be accessed from the FEJ1 side.

RobiFix-B35-FEJ1

RobiFix-S35-FZEE-R

RobiFix-FEJ1

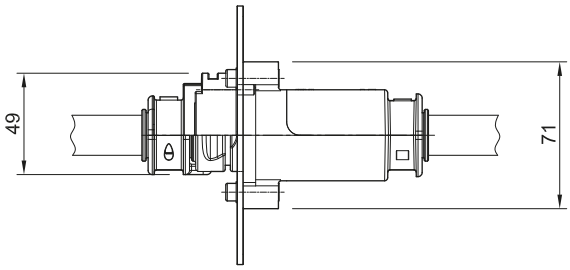

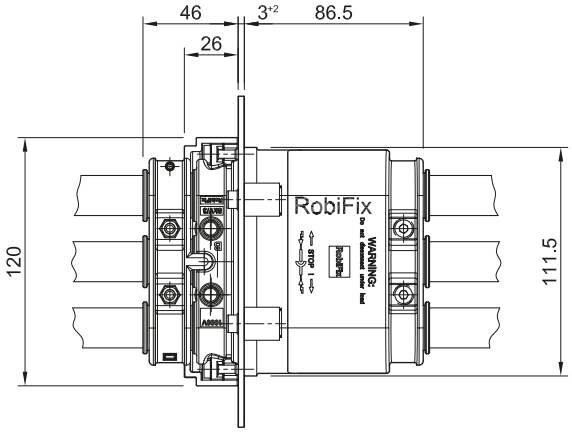

Order No.	Type	Designation	Contacts	Cable outer Ø
				mm
30.4081	RobiFix-B35-FEJ1	Female connector, incl. flanged cable strain relief	BP8/35	~11 – 17
30.4088	RobiFix-S35-FZEE-R	Male connector, incl. cable strain relief housing RobiFix-FZEE-R	SP8/35	~11 - 17

Individual parts

30.4082	RobiFix-FEJ1	Flanged cable strain relief without connector	without	~11 - 17
30.4084	RobiFix-B-FEJ1	Female connector empty, incl. Flanged cable strain relief	without	~11 - 17
30.4087	RobiFix-S-FZEE-R	Male connector empty, incl. cable strain relief housing RobiFix-FZEE-R	without	~11 - 17
		Pin and socket contacts (25/35/50 mm²)	see page 22	

Accessories page 23 – 28

MA

Assembly instructions MA311

www.staubli.com/electrical

J1 Flange mount

Mixed conductors, two-sided access

Two-sided access for installation:
Screw heads of the housings are accessible in the respective plug-in direction.

RobiFix-B35-FZEM
RobiFix-B50-FZEM-M50

RobiFix-S35-FZEE

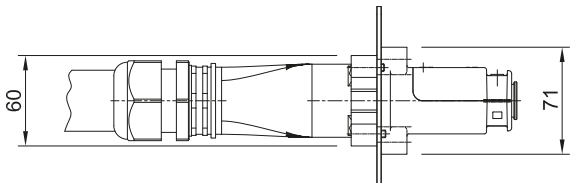

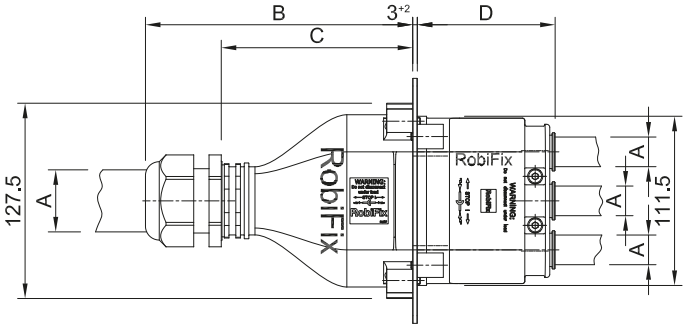

Order No.	Type	Designation	Contacts	Cable outer Ø	Length		
				A	B	C	D
				mm	mm		
30.4071	RobiFix-B35-FZEM	Female connector, incl. cable strain relief housing RobiFix-FZEM	BP8/35	18 – 32 (M40)	175	125	–
30.4052	RobiFix-B50-FZEM-M50	Female connector, incl. cable strain relief housing RobiFix-FZEM-M50	BP8/50K	24 – 38,5 (M50)	185	130	–
30.4039	RobiFix-S35-FZEE	Male connector, incl. cable strain relief housing RobiFix-FZEE	SP8/35	~ 11 – 17	–	–	90

Individual parts

30.4076	RobiFix-B-FZEM	Female connector empty, incl. cable strain relief housing RobiFix-FZEM	without	18 – 32 (M40)	175	125	–
30.4057	RobiFix-B-FZEM-M50	Female connector empty, incl. cable strain relief housing RobiFix-FZEM-M50	without	24 – 38,5 (M50)	185	130	–
30.4043	RobiFix-S-FZEE	Male connector empty, incl. cable strain relief housing RobiFix-FZEE	without	~ 11 – 17	–	–	90
		Pin and socket contacts (25/35/50 mm²)	see page 22				

MA

Assembly instructions MA311

www.staubli.com/electrical

Accessories page 23 – 28

Mixed conductors, single-sided access

Single-sided access for installation: All screw heads can be accessed from the FZEM side.

RobiFix-B35-FZEM
RobiFix-B50-FZEM-M50

RobiFix-S35-FZEE-R

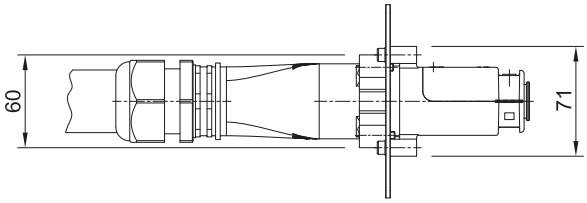

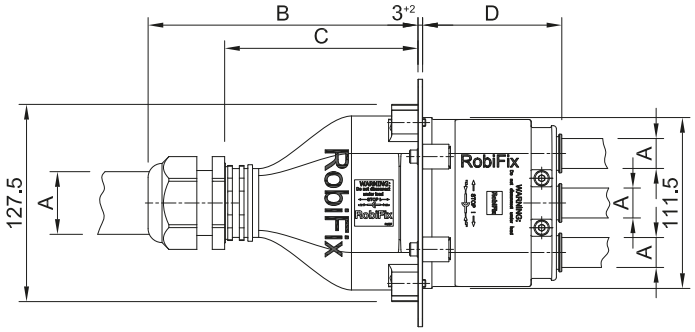

Order No.	Type	Designation	Contacts	Cable outer Ø	Length		
				A	B	C	D
				mm	mm		
30.4071	RobiFix-B35-FZEM	Female connector, incl. cable strain relief housing RobiFix-FZEM	BP8/35	18 – 32 (M40)	175	125	–
30.4052	RobiFix-B50-FZEM-M50	Female connector, incl. cable strain relief housing RobiFix-FZEM-M50	BP8/50K	24 – 38,5 (M50)	185	130	–
30.4088	RobiFix-S35-FZEE-R	Male connector, incl. cable strain relief housing RobiFix FZEE-R	SP8/35	~11 – 17	–	–	90

Individual parts

30.4076	RobiFix-B-FZEM	Female connector empty, incl. cable strain relief housing RobiFix-FZEM	without	18 – 32 (M40)	175	125	–
30.4057	RobiFix-B-FZEM-M50	Female connector empty, incl. cable strain relief housing RobiFix-FZEM-M50	without	24 – 38,5 (M50)	185	130	–
30.4087	RobiFix-S-FZEE-R	Male connector empty, incl. cable strain relief housing RobiFix-FZEE-R	without	~11 – 17	–	–	90
		Pin and socket contacts (25/35/50 mm²)	see page 22				

MA

Assembly instructions MA311

www.staubli.com/electrical

Accessories page 23 – 28

J1 Flat mount

Mixed conductors

RobiFix-B35-ZEM

RobiFix-S35-MTB

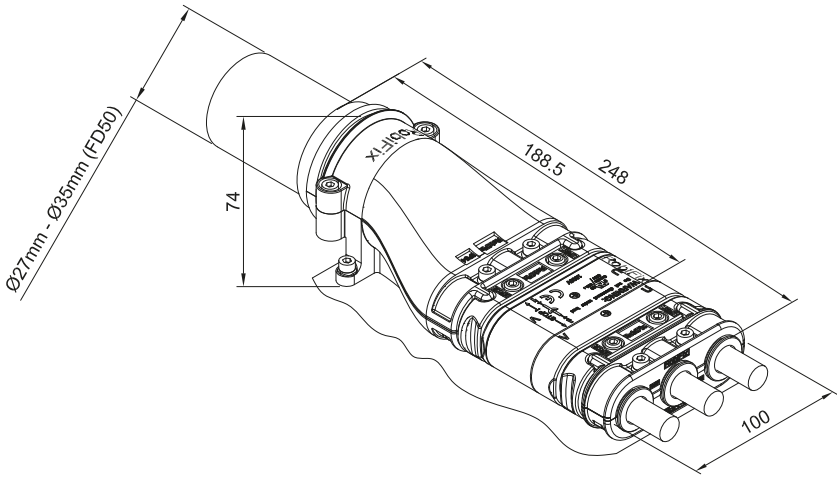

Order No.	Type	Designation	Contacts	Cable outer Ø
				mm
30.4018	RobiFix-B35-ZEM	Female connector, incl. cable strain relief housing RobiFix-ZEM	BP8/35	27 – 35 36 – 50[1]
30.4010	RobiFix-S35-MTB	Male connector complete (incl. cable strain relief and contacts)	SP8/35	~ 11 – 17
Individual parts				
30.4023	RobiFix-B-ZEM	Female connector empty, incl. cable strain relief housing RobiFix-ZEM	without	27 – 35 36 – 50[1]
30.4016	RobiFix-S-L	Male connector empty (incl. cable strain relief)	without	~ 11 – 17
		Pin and socket contacts (25/35/50 mm²)	see page 22	

[1] Rubber cable inlet FD50 will be replaced with form shroud (see page 27), see details MA311.

Accessories page 23 – 28

Assembly instructions MA311

www.staubli.com/electrical

J3 Flat mount

Single conductors

RobiFix-B35-MTB

RobiFix-S35-MTB

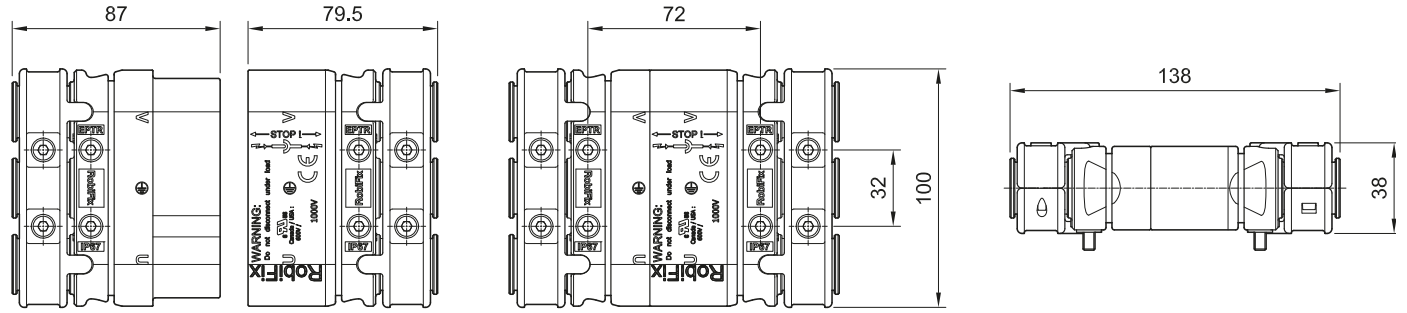

UL-File No.: E351413
25/35/50 mm²

Order No.	Type	Designation	Contacts	Cable outer Ø
				mm
30.4005	RobiFix-B35-MTB	Female connector complete (incl. cable strain relief and contacts)	BP8/35	~ 11 – 17
30.4010	RobiFix-S35-MTB	Male connector complete (incl. cable strain relief and contacts)	SP8/35	~ 11 – 17

Individual parts

30.4006	RobiFix-B-L	Female connector empty (incl. cable strain relief)	without	~ 11 – 17
30.4016	RobiFix-S-L	Male connector empty (incl. cable strain relief)	without	~ 11 – 17
		Pin and socket contacts (25/35/50 mm²)	see page 22	

Accessories page 23 – 28

Assembly instructions MA311

www.staubli.com/electrical

J3 Flat mount

Mixed conductors

RobiFix-B35-MTB

RobiFix-S35-ZEM

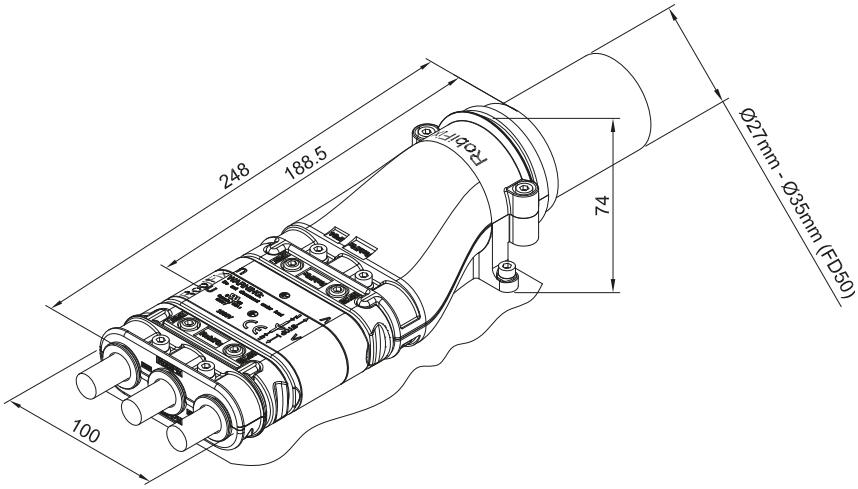

Order No.	Type	Designation	Contacts	Cable outer Ø mm
30.4005	RobiFix-B35-MTB	Female connector complete, incl. cable strain relief housing and contacts	BP8/35	~ 11 – 17
30.4025	RobiFix-S35-ZEM	Male connector, incl. cable strain relief housing RobiFix-ZEM	SP8/35	27 – 35 27 – 50[1]
Individual parts				
30.4006	RobiFix-B-L	Female connector empty (incl. cable strain relief and mounting sleeves)	without	~ 11 – 17
30.4030	RobiFix-S-ZEM	Male connector empty, incl. cable strain relief housing RobiFix-ZEM	without	27 – 35 27 – 50[1]
		Pin and socket contacts (25/35/50 mm²)	see page 22	

[1] Without cable inlet FD50, use form shroud (see page 27) instead.

Accessories page 23 – 28

Assembly instructions MA311

www.staubli.com/electrical

J6 Transformer connection

Straight

RobiFix-B35-FZEE

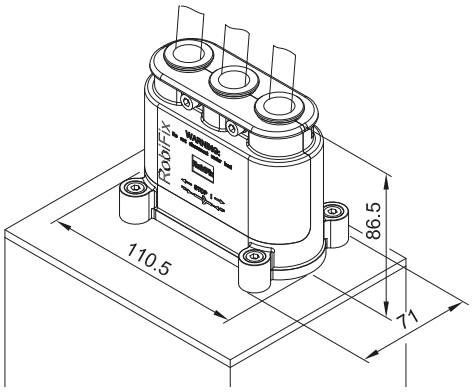

RobiFix-TAE1-57

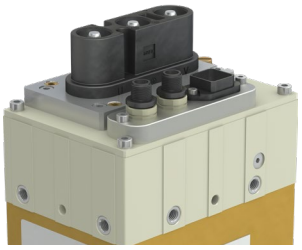

Order No.	Type	Designation	Contacts	Cable outer Ø
				mm
30.4033	RobiFix-B35-FZEE	Female connector, incl. flanged cable strain relief housing RobiFix-FZEE	BP8/35	~11 – 17
30.4046	RobiFix-TAE1-57	Male connector for welding transformers	S8/M8-57 AG	–
30.4187	RobiFix-TAE1-C-57	Male connector for welding transformers, with coding	S8/M8-57 AG	–

Individual parts

30.4037	RobiFix-B-FZEE	Female connector empty, incl. flanged cable strain relief housing RobiFix-FZEE	without	~ 11 – 17
30.4133	RobiFix-TAE1	Male connector for welding transformers, without contacts	without	–
30.4186	RobiFix-TAE1-C	Male connector for welding transformers, with coding, without contacts	without	–
		Pin and socket contacts (25/35/50 mm²)	see page 22	

Accessories page 23 – 28

MA

Assembly instructions MA311

www.staubli.com/electrical

J6 Transformer connection

90° adapter

RobiFix-B35-FZEE

RobiFix-TWA

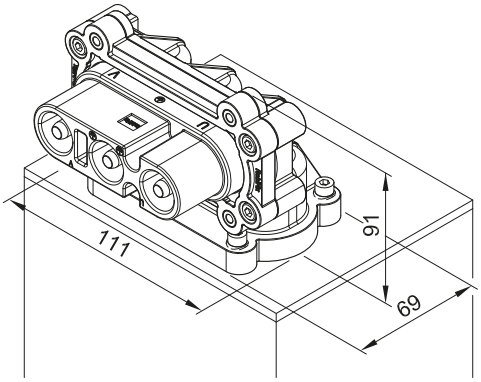

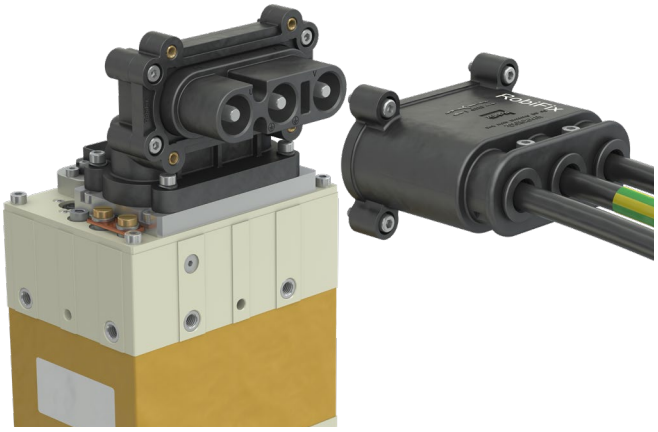

Order No.	Type	Designation	Contacts	Cable outer Ø
				mm
30.4033	RobiFix-B35-FZEE	Female connector, incl. flanged cable strain relief housing RobiFix-FZEE	BP8/35	~ 11 – 17
30.4013	RobiFix-TWA	Male connector for welding transformers, 90° adapter	–	–
Individual parts				
30.4037	RobiFix-B-FZEE	Female connector empty, incl. flanged cable strain relief housing RobiFix-FZEE	without	~ 11 – 17
		Pin and socket contacts (25/35/50 mm²)	see page 22	

MA

Assembly instructions MA311

www.staubli.com/electrical

RobiFix, with pre-wired 35 mm² conductors

Suitable for stationary robotic welding guns up to 690 V and 150 A, with one or two connectors

33002312-1502021

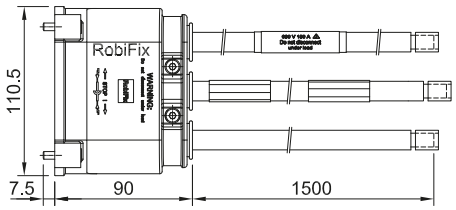

33002338-1002021

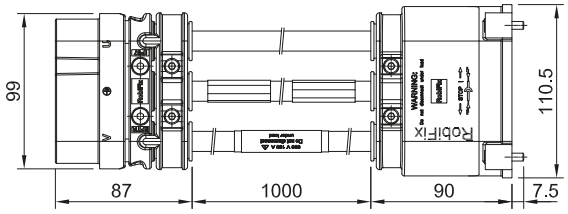

33002378-1002021

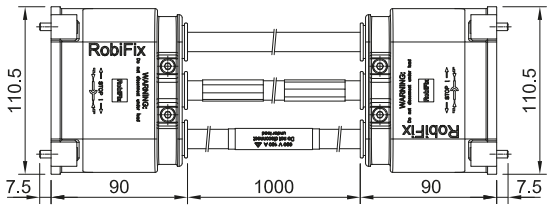

Order No.	Type	Name	Contacts	Cable	
				Outer Ø	Length
				(mm)	L (cm)
33002312-1502021	RobiFix-PW150-B35FZEE	RobiFix-B35-FZEE, pre-assembled with 3 individual wires 150 cm	BP8/35	~11 – 17	150
33002338-1002021	RobiFix-PW100-S35MTB-B35FZEE	RobiFix-S35-MTB + RobiFix-B35-FZEE, pre-assembled with 3 individual wires 100 cm	SP8/35 + BP8/35	~11 – 17	100
33002378-1002021	RobiFix-PW100-S35FZEE-B35FZEE	RobiFix-S35-FZEE + RobiFix-B35-FZEE, pre-assembled with 3 individual wires 100 cm	SP8/35 + BP8/35	~11 – 17	100

MA

Assembly instructions MA311

www.staubli.com/electrical

Accessories page 23 – 28

Single contacts

BP8/25

SP8/25

S8/M8-41 AG

BP8/35

SP8/35

S8/M8-57 AG

BP8/50K

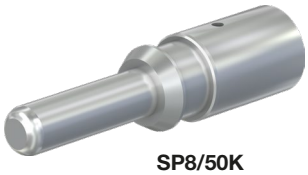

SP8/50K

MVS8-S/B-L

Order No.	Type	Designation	Nominal-Ø	Conductor cross section		I.D. crimping sleeve
			mm	mm²	AWG	mm/inch
30.0100 **30.0500**	BP8/25 SP8/25	Socket Pin	8 mm	25 mm²	~ 4 AWG	~ 8 mm/.31"
30.0101 **30.0501**	BP8/35 SP8/35	Socket Pin	8 mm	35 mm²	~ 2 AWG	~ 9 mm/.35"
30.4150 **30.4154**	BP8/50K SP8/50K	Socket Pin	8 mm	50 mm²	~ 1/0 AWG	~ 11 mm/.43"
30.0401	S8/M8-41 AG	Threaded pin for transformer 41 mm	8 mm	–	–	–
30.0403	S8/M8-57 AG	Threaded pin for transformer 57 mm	8 mm	–	–	–
30.4189	MVS8-S/B-L	Blind plug for pin or socket				

Accessories

Adapter and bracket for stationary robot welding guns

Connectors designed for the robot base (J1) can also be used for the power supply of welding transformers thanks to these adapters.

RobiFix-A-TAE1

RobiFix-W-ZEM

Order No.	Type	Designation	fits to
30.4058	RobiFix-A-TAE1	Adapter for flange-mount connector	RobiFix-TAE1... + RobiFix-B...-FZEM
30.4062	RobiFix-W-ZEM	Bracket for flat-mount connector	RobiFix-TAE1... + RobiFix-B...-ZEM

MA

Assembly instructions MA311

www.staubli.com/electrical

Locking system for single dresspacks

If not installed on the robot, RobiFix remains connected and locked using RobiFix-LOCK. Ideal for cable extensions.

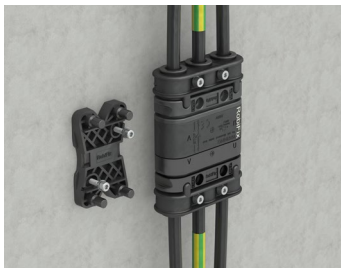

Wall mounting

RobiFix-LOCK

Mobile mounting

Order No.	Type	Designation	fits to
30.4061	RobiFix-LOCK	Locking system (including mounting screws and Velcro)	RobiFix-S...-MTB + RobiFix-B...-MTB

Mounting plate and mounting bracket for single-dresspacks

RobiFix-MP

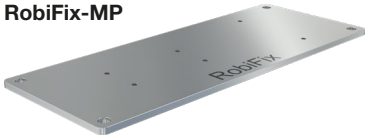

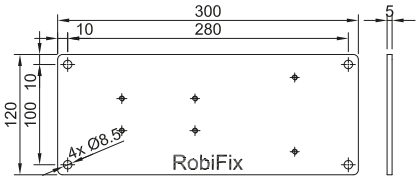

RobiFix-W

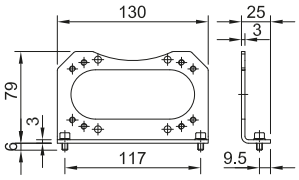

Order No.	Type	Name	fits to
33002207	RobiFix-MP	Mounting plate (300 mm × 120 mm)	RobiFix...ZEM and RobiFix...MTB (mated)
33002380	RobiFix-W	Mounting bracket (130 mm × 79 mm)	RobiFix...FZEE, RobiFix...FZEE-R, RobiFix...FZEM, RobiFix...FEJ1

Mounting bracket for double dresspacks

Safe and easy to mount, this bracket allows the installation on welding transformers of double dresspacks ending with two RobiFix power connectors.

RobiFix-Twin-TB

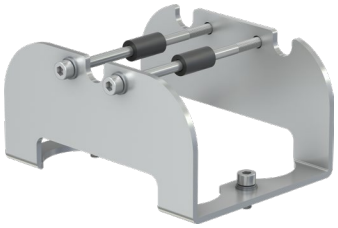

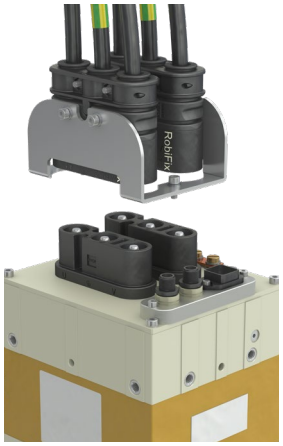

Order No.	Type	Designation	fits to
30.4067	RobiFix-Twin-TB	Mounting bracket for welding transformer installation	RobiFix-B...-MTB

MA

Assembly instructions MA311

www.staubli.com/electrical

Locking system for double dresspacks

Aluminum welding requires more welding current, usually more than 250 A on the primary side. Therefore bigger cables and larger power connectors are needed. With conventional solution, the robot dress-out would become extremely rigid. Thanks to RobiFix-TwinLock, you can carry up to 421 A (thermal steady current) and still keep the flexibility of your dresspack, even with single conductors up to 50 mm².

RobiFix-TwinPower

Robot mounting

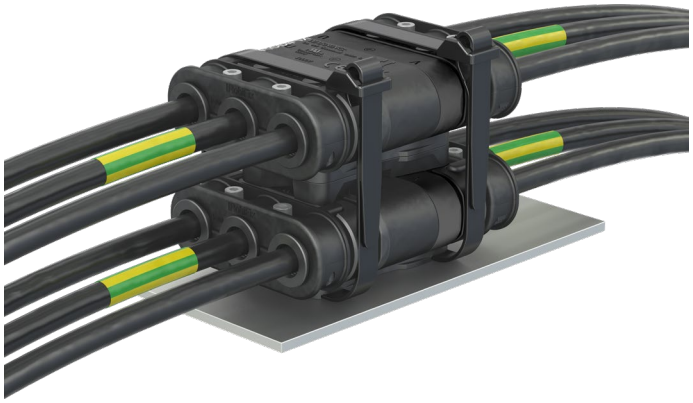

RobiFix-TwinLock

Mobile mounting

Order No.	Type	Designation	fits to
30.4064	RobiFix-TwinPower	Locking system, incl. mounting screws and removable cable ties (without connector)	RobiFix-S...-MTB + RobiFix-B...-MTB
30.4063	RobiFix-TwinLock	Locking system, incl. removable cable ties (without connector)	RobiFix-S...-MTB + RobiFix-B...-MTB

MA

Assembly instructions MA311

www.staubli.com/electrical

Form shroud, special screws

These accessories allow the use of quite large or thin welding cables (outer diameter).

WST-TS/150

RobiFix-SS-M5

RobiFix-MS

RobiFix-HS-M5

Order No.	Type	Designation	fits to
30.0021	WST-TS/150	Form shroud (adhesive lined heat shrink insulator)	RobiFix-...-ZEM
30.4292	RobiFix-SS-M5	RobiFix shoulder screw M5 set (2 pcs) (Standard as of 2020-10)	RobiFix-...MTB, RobiFix-...-ZEM, RobiFix-...-FZEM, RobiFix-...-FZEE, RobiFix-B..., RobiFix-...-ID
30.4060	RobiFix-MS	RobiFix mounting sleeve set (2 pcs) (Standard up to 2020-09)	30.4291
30.4291	RobiFix-HS-M5	RobiFix cylinder head screw M5 set (2 pcs) (Standard up to 2020-09)	30.4060

Protective caps, cable strain relief, rubber rings and heat shrink tubes

Protective caps are beneficial to protect against dust and moisture of pins and sockets during transportation and storage.

Important:
If necessary, the cable diameter can be altered using rubber rings. See assembly instructions MA311 for the relevant strain relief.

RobiFix-PC

RobiFix-ZE

RobiFix-3RR10/15

RobiFix-3RR12/15

RobiFix-3WST12/4

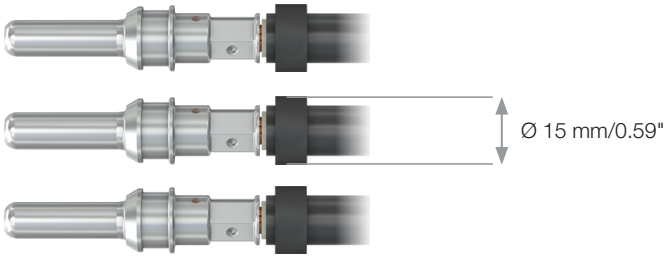

Order No.	Type	Designation	fits to
30.4157	RobiFix-PC	Set of 3 protective caps	RobiFix-S..., RobiFix-B..., RobiFix-TAE1
30.4031	RobiFix-ZE	Cable strain relief	RobiFix-S...-MTB + RobiFix-B...-MTB
30.4167	RobiFix-3RR10/15	Set of 3 rubber rings (inner Ø 10 mm)	–
30.4192	RobiFix-100RR10/15	Set of 100 rubber rings (inner Ø 10 mm)	–
30.4173	RobiFix-3RR12/15	Set of 3 rubber rings (inner Ø 12 mm)	–
30.4193	RobiFix-100RR12/15	Set of 100 rubber rings (inner Ø 12 mm)	–
30.4196	RobiFix-3WST12/4	Set of 3 heat shrink tubes, black	–
30.4197	RobiFix-100WST12/4	Set of 100 heat shrink tubes, black	–
30.4198	RobiFix-3WST12/4_3RR10/15	Set of 3 rings (30.4167) + 3 tubes (30.4196)	RobiFix-...-ZEM, RobiFix-...-FZEM,
30.4199	RobiFix-3RR10/15_3RR12/15	Set of 3 rings (30.4167) + 3 rings (30.4173)	RobiFix...MTB, RobiFix...FZEE, RobiFix...FEJ1, RobiFix-...-L, RobiFix-...-ID

Automatic tool-changers

Complete economic solution for spot-welding robots with an automatic tool-changer

MGK4-180-RFA

Mounting type 1

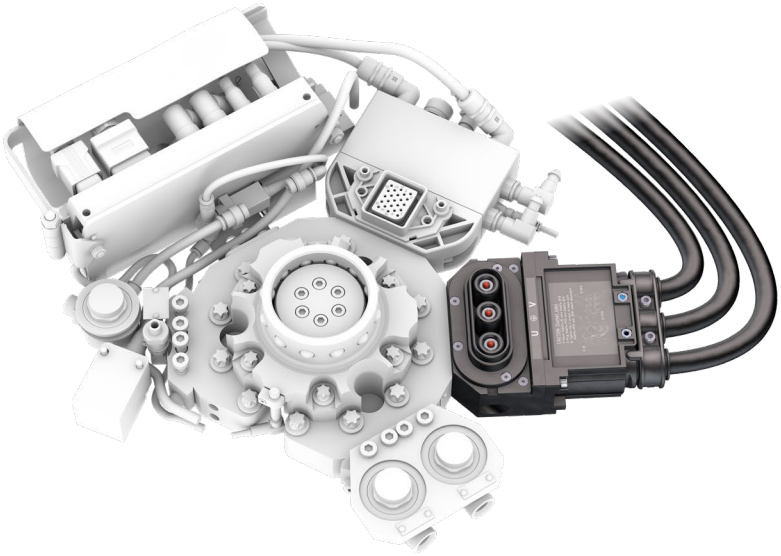

Example: RobiFix in use as an electrical supply line for the power module on a Stäubli MPS-system (tool-changer).
With RobiFix, you can standardize and install very economically, the primary circuit connection from the robot base (J1) to the welding gun (J6).
Benefits: the power cables inside the robot dresspack always end in the same connector, with or without the tool-changer.

The new standard makes it possible for end-users to reduce extra amounts of dresspacks and energy supplies for the robot to a minimum.
The docking plug connector MGK4-180-RFA has the advantage of being able to be assembled straight onto the tool-changer or at 60 degree angle, allowing optimal cable management.

Mounting type 2 with angled adapter

MGK4-180-RFA is a customer specific development from Stäubli for Stäubli Tec-Systems. Please refer to Stäubli for this solution (Connectors Division).

FL3...2+PE-RF-ECO

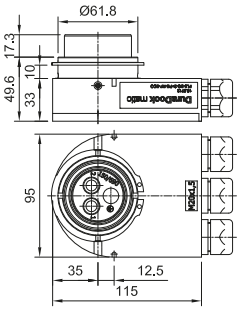

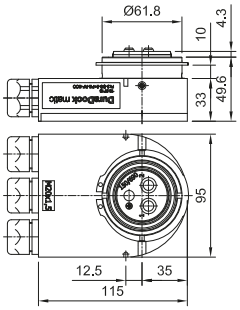

Order No.	Type	Conductor cross section		Number of poles	Nominal-Ø contact	Rated current	Surface	Cable gland
		mm²	AWG		mm	A		M20
18.0713	FL3-SG-2+PE-RF-ECO	25/35/38	4/2	2+PE	8	135/150/150		×
18.0712	FL3-BG-2+PE-RF-ECO	25/35/38	4/2	2+PE	8	135/150/150		×

Contact pieces with plug termination

Step 1:
Once the strain relief has been disassembled, the assembled cables are removed from the RobiFix contact carrier by hand ...

Step 2:
... and inserted directly into the FL3-…-RF-ECO and automatically locked!

Interchangeable contact inserts

Service friendly thanks to the rapid changing system

Electrical values
Rating factor 0,9

The current capacity of a connection is limited by the thermal capacity of its contact, connecting and insulating materials. The derating diagram shows the continuous current (not intermittent) that flows through all the contact elements of a connector at one time, whereby the max temperature limit is not exceeded.

Single dresspack (0 – 1000 Hz)

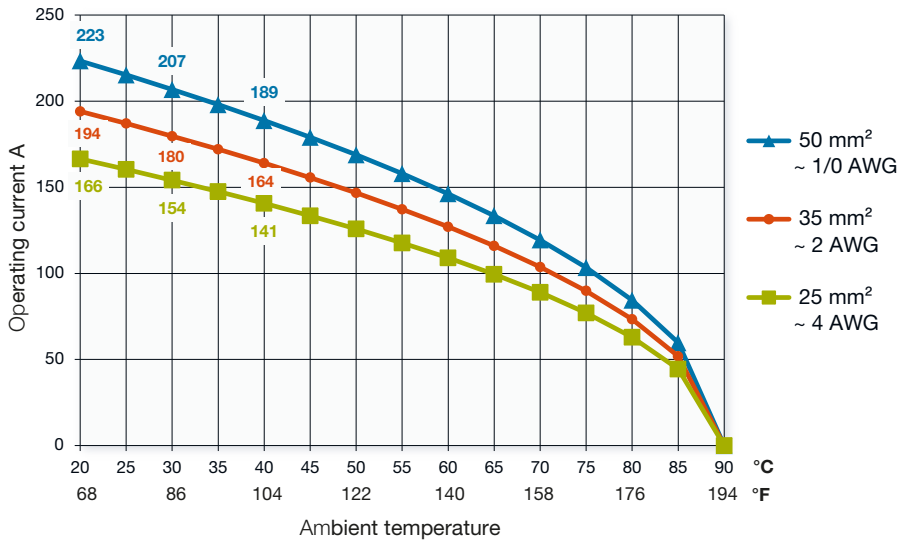

Rating factor
(related to frequency and cross-section)

	Frequency	
	2000 Hz	3000 Hz
50 mm²	0.89	0.86
35 mm²	0.93	0.90
25 mm²	0.95	0.92

Double dresspack (0 – 1000 Hz)

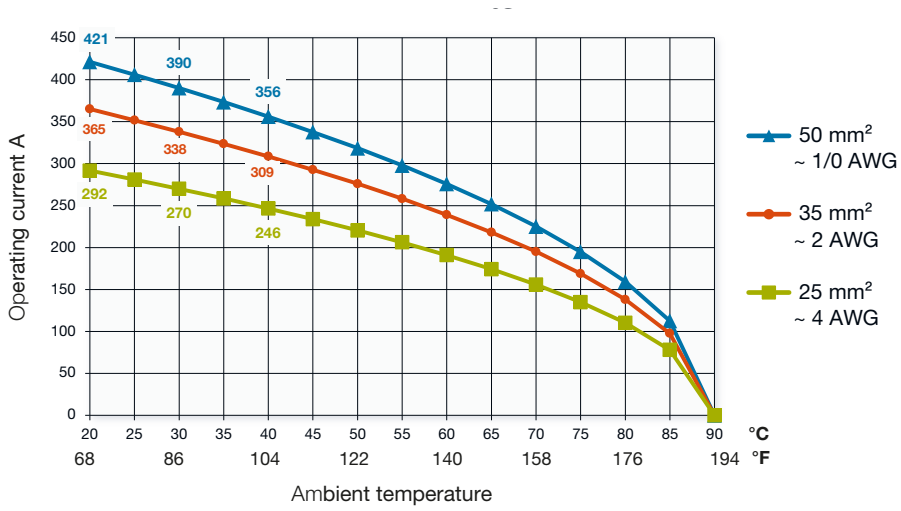

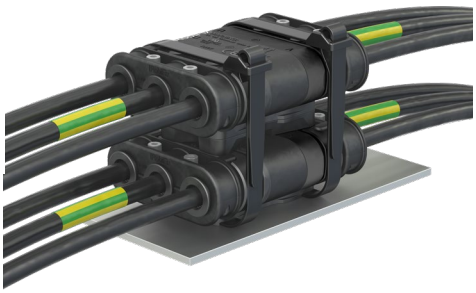

Example: at 1000 Hz and with 50 mm² (1/0 AWG) cables at 20 °C (68 °F) RobiFix can transmit a thermal study current of max 223 A. At a higher frequency of 3000 Hz, RobiFix can carry max 192 A (223 x 0.86).

Note:
When selecting cable cross sections, please also observe the DIN VDE 0298-4 and EN 60204-1/IEC 60204-1 standards.

Current characteristics for short operating periods are displayed below, in addition to the maximum continuous current (graph above). The duty cycle is determined within one cycle duration (relationship between switch-on and pause time).

Current at Tamb 20 °C (68 °F) (0 – 1000 Hz)

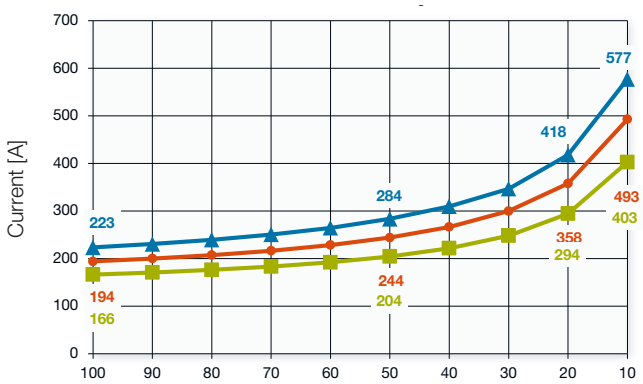

Current at Tamb 30 °C (86 °F) (0 – 1000 Hz)

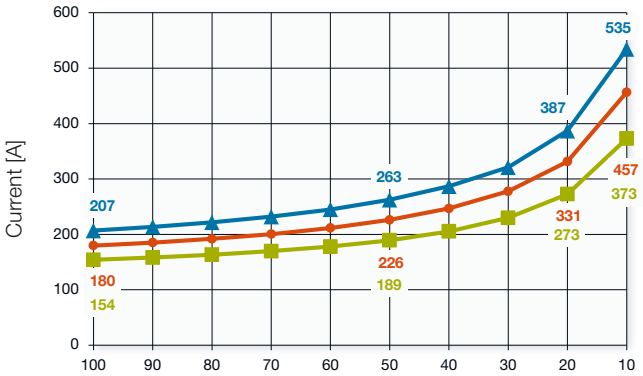

Current at Tamb 40 °C (104 °F) (0 – 1000 Hz)

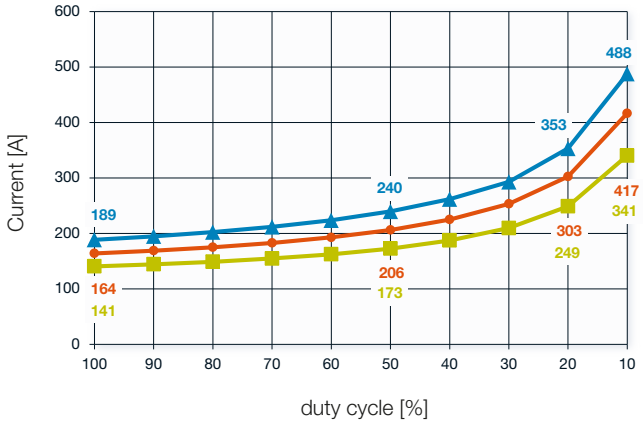

Rating factor
(related to frequency and cross-section)

	Frequency	
	2000 Hz	3000 Hz
50 mm²	0.89	0.86
35 mm²	0.93	0.90
25 mm²	0.95	0.92

RobiFix 50 mm²
Time cycle basis 10 min

RobiFix 35 mm²
Time cycle basis 10 min

RobiFix 25 mm²
Time cycle basis 10 min

Example: With 50 mm² (1/0 AWG) cables and at 20 °C (68 °F), RobiFix can transmit a thermal study current of max 223 A, representing a duty cycle of 100%. With a switch-on duration of 20% and a pause time of 80%, RobiFix can carry max 418 A.
Basis is a cycle time of 10 minutes, i.e. 20% correspond to 2 minutes “on” and 8 minutes “off”.

Crimping tool case CZK2

Pos. Nr.	Order No.	Type	Description	
1a	**18.3111**	**CZK2-230**	**Crimping tool case (incl. shoulder strap and plastic carrying case)**	**230 V**
Content				
2	-	CZ-B500	Electro hydraulic crimping tool „B500“	
3	**18.3042**	ALI-18	Battery Li-ION – 18 V – 4,0 Ah, compatible with the Cordless Alliance System (CAS)	
4	**18.3023**	MTB11-25-50	Crimping die 25 mm²/4 AWG	
5	**18.3024**	MTB13-35-50	Crimping die 35 mm²/~2 AWG	
6	**18.3044**	ALG2-230	Battery charger AC 230 V	
1b	**18.3112**	**CZK2-110**	**Crimping tool case (incl. shoulder strap and plastic carrying case)**	**110/120 V**
Content				
2	-	CZ-B500	Electro hydraulic crimping tool „B500“	
3	**18.3042**	ALI-18	Battery Li-ION – 18 V – 4,0 Ah, compatible with the Cordless Alliance System (CAS)	
4	**18.3023**	MTB11-25-50	Crimping die 25 mm²/4 AWG	
5	**18.3024**	MTB13-35-50	Crimping die 35 mm²/~2 AWG	
7	**18.3043**	ALG2-110	Battery charger 110/AC 120 V	
Optional Accessories				
8	**18.3029**	MTB9-16-50	Crimping die 16 mm²/6 AWG	
9	**18.3025**	MTB14,5-50-50	Crimping die 50 mm²/1/0 AWG	
Optional Assembly tools for TSS/TSB150 (WeldFix 8) and TSS/TSB250 (WeldFix 12)				
	18.3022	MSA-WZ8	Extraction tool (pin)	
	18.3017	MBA-WZ6	Extraction tool (socket)	
	18.3021	ME-WZ11/38	Insertion tool (pin/socket)	

MA

Assembly instructions MA306

www.staubli.com/electrical

Index

Sorted by Order No.

Order No.	Type	Page
18.0712	FL3-BG-2+PE-RF-ECO	30
18.0713	FL3-SG-2+PE-RF-ECO	30
18.3017	MBA-WZ6	33
18.3021	ME-WZ11/38	33
18.3022	MSA-WZ8	33
18.3023	MTB11-25-50	33
18.3024	MTB13-35-50	33
18.3025	MTB14,5-50-50	33
18.3029	MTB09-16-50	33
18.3042	ALI-18	33
18.3043	ALG2-110	33
18.3044	ALG2-230	33
18.3111	CZK2-230	33
18.3112	CZK2-110	33
30.0021	WST-TS/150	27
30.0100	BP8/25	22
30.0101	BP8/35	22
30.0401	S8/M8-41 AG	22
30.0403	S8/M8-57 AG	22
30.0500	SP8/25	22
30.0501	SP8/35	22
30.4005	RobiFix-B35-MTB	17, 18
30.4006	RobiFix-B-L	17, 18
30.4010	RobiFix-S35-MTB	11, 16, 17
30.4013	RobiFix-TWA	20
30.4016	RobiFix-S-L	11, 16, 17
30.4018	RobiFix-B35-ZEM	16
30.4023	RobiFix-B-ZEM	16
30.4025	RobiFix-S35-ZEM	18
30.4030	RobiFix-S-ZEM	18
30.4031	RobiFix-ZE	28
30.4033	RobiFix-B35-FZEE	19, 20
30.4037	RobiFix-B-FZEE	19, 20
30.4039	RobiFix-S35-FZEE	12, 14
30.4043	RobiFix-S-FZEE	12, 14
30.4046	RobiFix-TAE1-57	19
30.4052	RobiFix-B50-FZEM-M50	14, 15
30.4057	RobiFix-B-FZEM-M50	14, 15
30.4058	RobiFix-A-TAE1	23
30.4060	RobiFix-MS	27

Order No.	Type	Page
30.4061	RobiFix-LOCK	24
30.4062	RobiFix-W-ZEM	23
30.4063	RobiFix-TwinLock	26
30.4064	RobiFix-TwinPower	26
30.4065	RobiFix-B-ID	11
30.4066	RobiFix-B35-ID	11
30.4067	RobiFix-Twin-TB	24
30.4071	RobiFix-B35-FZEM	14, 15
30.4076	RobiFix-B-FZEM	14, 15
30.4081	RobiFix-B35-FEJ1	12, 13
30.4082	RobiFix-FEJ1	12, 13
30.4084	RobiFix-B-FEJ1	12, 13
30.4087	RobiFix-S-FZEE-R	13, 15
30.4088	RobiFix-S35-FZEE-R	13, 15
30.4133	RobiFix-TAE1	19
30.4150	BP8/50K	22
30.4154	SP8/50K	22
30.4157	RobiFix-PC	28
30.4167	RobiFix-3RR10/15	28
30.4173	RobiFix-3RR12/15	28
30.4186	RobiFix-TAE1-C	19
30.4187	RobiFix-TAE1-C-57	19
30.4189	MVS8-S/B-L	22
30.4192	RobiFix-100RR10/15	28
30.4193	RobiFix-100RR12/15	28
30.4196	RobiFix-3WST12/4	28
30.4197	RobiFix-100WST12/4	28
30.4198	RobiFix-3WST12/4_3RR10/15	28
30.4199	RobiFix-3RR10/15_3RR12/15	28
30.4291	RobiFix-HS-M5	27
30.4292	RobiFix-SS-M5	27
33002207	RobiFix-MP	25
33002312-1502021	RobiFix-PW150-B35FZEE	21
33002338-1002021	RobiFix-PW100-S35MTB-B35FZEE	21
33002378-1002021	RobiFix-PW100-S35FZEE-B35FZEE	21
33002380	RobiFix-W	25
	CZ-B500	33

Sorted by type

Type	Order No.	Page
ALG2-110	18.3043	33
ALG2-230	18.3044	33
ALI-18	18.3042	33
BP8/25	30.0100	22
BP8/35	30.0101	22
BP8/50K	30.4150	22
CZ-B500		33
CZK2-110	18.3112	33
CZK2-230	18.3111	33
FL3-BG-2+PE-RF-ECO	18.0712	30
FL3-SG-2+PE-RF-ECO	18.0713	30
MBA-WZ6	18.3017	33
ME-WZ11/38	18.3021	33
MSA-WZ8	18.3022	33
MTB09-16-50	18.3029	33
MTB11-25-50	18.3023	33
MTB13-35-50	18.3024	33
MTB14,5-50-50	18.3025	33
MVS8-S/B-L	30.4189	22
RobiFix-100RR10/15	30.4192	28
RobiFix-100RR12/15	30.4193	28
RobiFix-100WST12/4	30.4197	28
RobiFix-3RR10/15_3RR12/15	30.4199	28
RobiFix-3RR10/15	30.4167	28
RobiFix-3RR12/15	30.4173	28
RobiFix-3WST12/4_3RR10/15	30.4198	28
RobiFix-3WST12/4	30.4196	28
RobiFix-A-TAE1	30.4058	23
RobiFix-B-FEJ1	30.4084	12, 13
RobiFix-B-FZEE	30.4037	19, 20
RobiFix-B-FZEM-M50	30.4057	14, 15
RobiFix-B-FZEM	30.4076	14, 15
RobiFix-B-ID	30.4065	11
RobiFix-B-L	30.4006	17, 18
RobiFix-B-ZEM	30.4023	16
RobiFix-B35-FEJ1	30.4081	12, 13
RobiFix-B35-FZEE	30.4033	19, 20
RobiFix-B35-FZEM	30.4071	14, 15
RobiFix-B35-ID	30.4066	11
RobiFix-B35-MTB	30.4005	17, 18

Type	Order No.	Page
RobiFix-B35-ZEM	30.4018	16
RobiFix-B50-FZEM-M50	30.4052	14, 15
RobiFix-FEJ1	30.4082	12, 13
RobiFix-HS-M5	30.4291	27
RobiFix-LOCK	30.4061	24
RobiFix-MP	33002207	25
RobiFix-MS	30.4060	27
RobiFix-PC	30.4157	28
RobiFix-PW100-S35FZEE-B35FZEE	33002378-1002021	21
RobiFix-PW100-S35MTB-B35FZEE	33002338-1002021	21
RobiFix-PW150-B35FZEE	33002312-1502021	21
RobiFix-S-FZEE-R	30.4087	13, 15
RobiFix-S-FZEE	30.4043	12, 14
RobiFix-S-L	30.4016	11, 16, 17
RobiFix-S-ZEM	30.4030	18
RobiFix-S35-FZEE-R	30.4088	13, 15
RobiFix-S35-FZEE	30.4039	12, 14
RobiFix-S35-MTB	30.4010	11, 16, 17
RobiFix-S35-ZEM	30.4025	18
RobiFix-SS-M5	30.4292	27
RobiFix-TAE1-57	30.4046	19
RobiFix-TAE1-C-57	30.4187	19
RobiFix-TAE1-C	30.4186	19
RobiFix-TAE1	30.4133	19
RobiFix-TWA	30.4013	20
RobiFix-Twin-TB	30.4067	24
RobiFix-TwinLock	30.4063	26
RobiFix-TwinPower	30.4064	26
RobiFix-W-ZEM	30.4062	23
RobiFix-W	33002380	25
RobiFix-ZE	30.4031	28
S8/M8-41 AG	30.0401	22
S8/M8-57 AG	30.0403	22
SP8/25	30.0500	22
SP8/35	30.0501	22
SP8/50K	30.4154	22
WST-TS/150	30.0021	27

● Stäubli Units ○ Representatives/Agents

Global presence of the Stäubli Group

www.staubli.com

Staubli is a trademark of Stäubli International AG, registered in Switzerland and other countries.
We reserve the right to modify product specifications without prior notice. © Stäubli 2025.
ec.marcom@staubli.com | Photo credits: Stäubli , Shutterstock.com

AT Rob RobiFix 11014065-en O 09.2025